HEAVY DUTY SUBMERSIBLE AGITATOR PUMPS

TYPE DP-150B

DIMENSIONAL DRAWING

M-18018

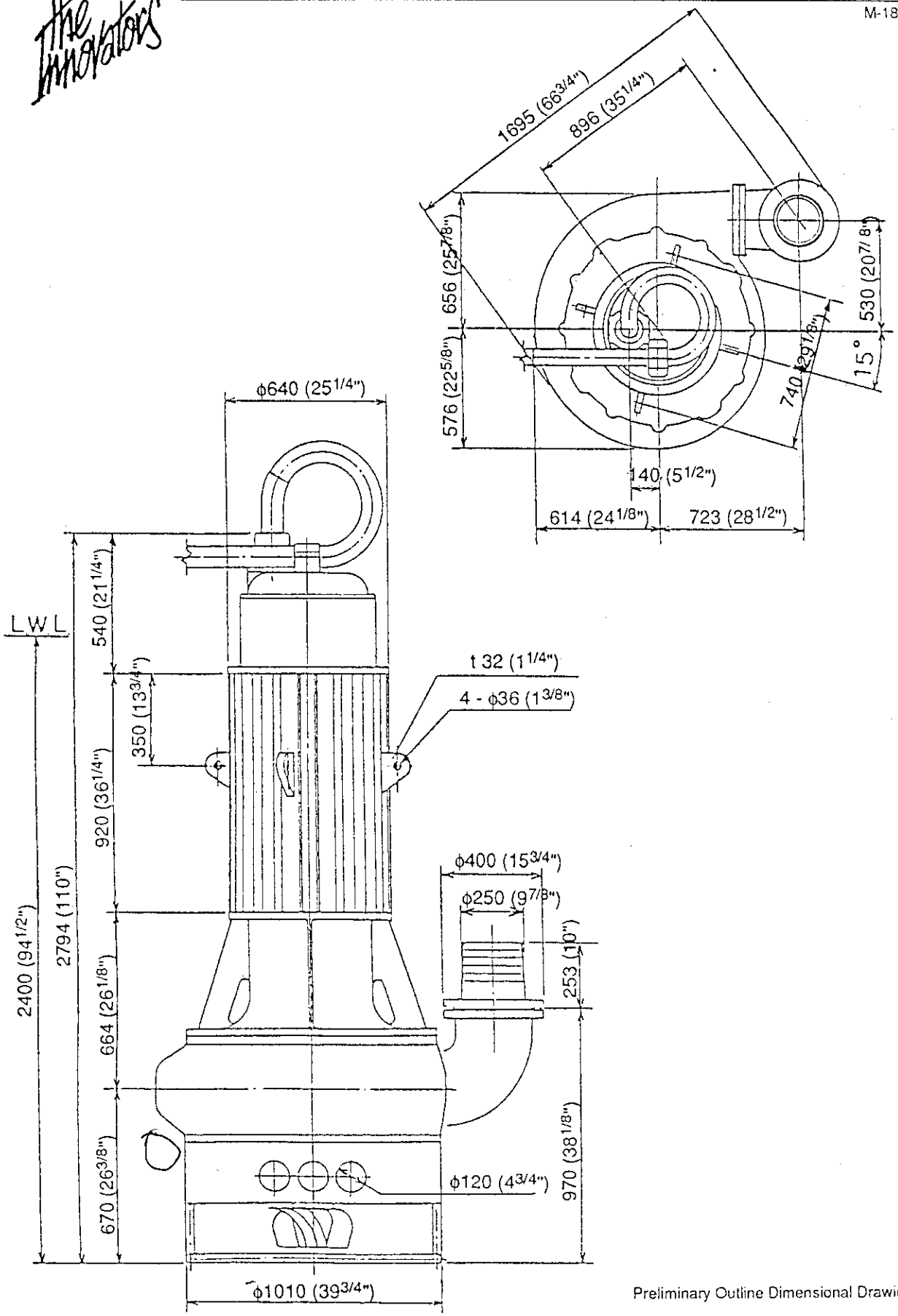

Preliminary Outline Dimensional Drawings